IBVRM
Issue 8-27 12/12/2008
ECR 2128

BVR16, 32, 48 & 64M Microphones

Utilising software issue 'BVAM8-27'

Operating Instructions

Baldwin Boxall Communications Ltd.
Wealden Industrial Estate, Farningham Road
Crowborough, East Sussex, TN6 2JR

Telephone: 01892 664422 Fax: 01892 663146
Website: www.baldwinboxall.co.uk
Email: mail@baldwinboxall.co.uk

BALDWIN BOXALL
COMMUNICATIONS

INDEX

1	……	Index
2	……	General Description
3	……	Connection & Communications
4	……	Instructions for Broadcasting a Live Emergency Microphone Message
4	……	Instructions for Using ‘EMERGENCY CALL ALL’
5	……	Instructions for Broadcasting and Cancelling an Emergency Recorded Message Preceded by “Start of Test” and concluding with “End of “Test”.
6	……	Instructions for Broadcasting and Cancelling an Emergency Recorded Message
7	……	Instructions for Broadcasting a Non Emergency (Paging) Microphone Message
8	……	Instructions for Selecting and Cancelling Background Music
9&10	……	Zone Displays
11	……	Status Indicators (Not 7 segment LEDs)
12	……	Dil Switch Settings

BVR16, 32, 48 & 64M – Voice Alarm Microphones

The BVR Microphone range is designed specifically for the Voice Alarm market to interface with the VIGIL range of amplifiers. The units connect to the BVR20 (Microdrive) controller and the VIGIL amplifiers to provide the following facilities:-

16, 32, 48 & 64 Zone Selection	All Call
6 Message Selection	Background Music Selection
Fault Indicators	Speech Level Indicator
'Speak Now' Indicator	Monitoring of Microphone Speech and Signal Paths
Zone Status Indicators	

Data path is monitored using parity checking and hand shaking techniques.

VA Microphone Control Panel

Selector Switches

16, 32, 48, or 64 Zone selects
6 Message and Cancel
1 Live Microphone
1 Music Select
1 Emergency Message and Fire Microphone 'Enable' Keyswitch
1 System Fault Accept / Lamp Test

Each message has indications for fault and message in use i.e. active.

Emergency All Call Option

One of the requirements of BS5839 pt8 is for an 'Emergency Call All Microphone' that bypasses the data link and signal processing devices.
This is a 'factory fit' option only and is not fitted as standard since there may be more than one BVR Microphone installed.
See page 4 for instructions if this option is fitted.

Microphone Indications:

4 LED Bar to indicate speech level
Speak Now
Microphone Speech path fault

Zone Status Indications

7-segment display indicates true status of zone i.e. the message being broadcast, microphone emergency or normal paging and fault conditions.

Communications to Central Equipment

The Microphones as supplied are fitted with a 3 metre leads that should be terminated to Fire Proof cabling (MICC / FP200 or similar) for connection to the Central Equipment.
It is strongly recommended that separate cables be used for the audio pair to eliminate potential interference from the data signal.

Function	**BMS25 Pin Connection**
0V	19
Speech Audio Pair	16
Speech Audio Pair	18
+24V	20
All Call *	21 *
RS 485 Data pair	24
RS 485 Data pair	25
EMC Ground	17
Not used	White
Not used	Black

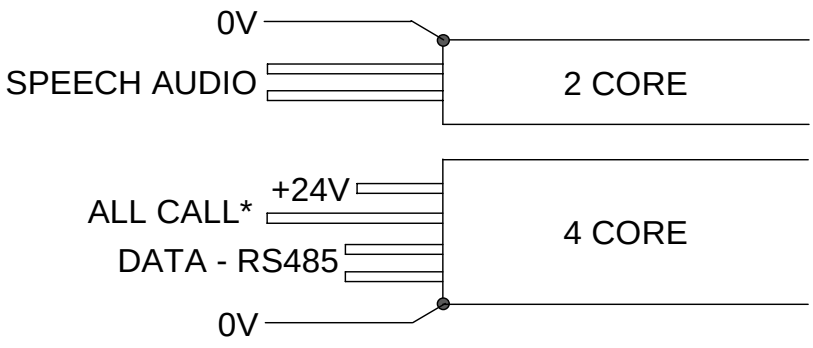

* Emergency All Call feature only when fitted

MICROPHONE SIGNAL Balanced audio at +10dBM (2.5V) from a source impedance of 400R.

DATA SIGNAL 9600 baud half duplex RS485

Microphone capsule and signal paths are monitored using a 20KHz signal.
Data signal path is monitored using parity checking and hand shaking techniques.

Micro Controller: PIC17C43 with watchdog restart.

Microphone Type: Capsule 200 Ohms Dynamic noise cancelling, or
Fist mic with PTT . 1.8m coil cord

Frequency Response: 250Hz – 12kHz

Sizes:

	Front Panel Size			Bezel Size		Bezel Cut-out Size	
Mic Type	H	L	W	L	W	L	W
BVR16M	80mm	306mm	180mm	337mm	211mm	317mm	191mm
BVR32M	80mm	536mm	180mm	566mm	211mm	546mm	191mm
BVR48M	80mm	726mm	180mm	756mm	211mm	546mm	191mm
BVR64M	80mm	536mm	348mm	N/A	N/A	N/A	N/A

To Broadcast a Live Emergency Microphone Message

1) Insert Key and rotate 45° clockwise.
The 'Emergency Enable' indicator will illuminate

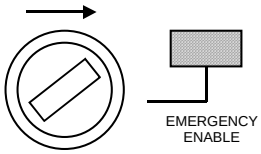

2) Pre-recorded message 2 being broadcast, (example):

Currently Broadcasting Message 2

3) Press 'Select Zone' of the desired zone or zones.
If no zones are selected an 'All Call' will be performed.

Zone Selected

4) Press 'Speak' key

Broadcast Emergency Microphone

Wait for the Speak Now indicator to illuminate and speak into the microphone at approximately 150mm.

5) Release 'Speak' key at end of announcement

Return to Broadcasting Message 2 (Example)

To Broadcast a Live Emergency Microphone Message using 'EMERGENCY CALL ALL'

Note: this is a factory fit option only, and is not fitted as standard.

In case of situations that prevent the console from functioning correctly (e.g. processor or communications faults) the "EMERGENCY CALL ALL" button can be used.

This will broadcast a message to all zones and is at the highest Priority (i.e. it will override all other broadcasts).

This method of paging is completely independent of all settings on the console and therefore should not be used unless absolutely necessary.

1) Press the 'Emergency All Call' button.

2) Speak into the microphone.

3) Release the 'Emergency All Call' button.

To Broadcast an Emergency Recorded Message, Preceded by "Start of Test" and concluded by "End of Test" Message

1) Insert Key and rotate 45° clockwise.
The 'Emergency Enable' indicator will illuminate

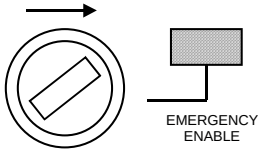

2) Zone Available

Currently silent (no broadcast

3) Press zone select of the desired zone or zones.
If no zones are selected an 'All Call' will be performed.

Zone Selected

4) Press Test Message, e.g. message 6

Broadcasting Message 6
"Start of Test".

5) Allow the message to sound at least once, and then either set the Fire Detection System into the Fire Alarm condition or select the appropriate message (e.g. Evacuate – Message 1) as shown below.

6) Press the zone select of the desired zone or zones

Zone selected, currently broadcasting Start of Test, Message 6

7) Select message, e.g. Evacuate (message 1)

Broadcasting message 1
Evacuate

8) At the end of the test,
Press zone select of the desired zone or zones

Broadcasting message 1

9) Press cancel to cancel message selected in step (8) and broadcast End of Test, message 7.

Broadcasting message 7
"End of Test".

10) At the end of the 'End of Test' message the zone will automatically clear.

No broadcast

To Broadcast an Emergency Recorded Message

1) Insert Key and rotate 45° clockwise.
The 'Emergency Enable' indicator will illuminate

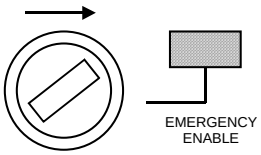

2) Zone Available

Currently silent (no broadcast

3) Press zone select of the desired zone or zones
If no zones are selected an 'All Call' will be performed.

Zone Selected

4) Press required function, e.g. message 2

Broadcasting Message 2

To Cancel Message

1) Insert Key and rotate 45° clockwise.
The 'Emergency Enable' indicator will illuminate

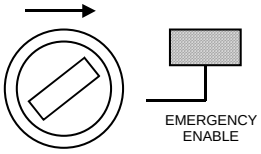

2) Message 2 being broadcast

Broadcasting Message 2

3) Press zone select of the desired zone or zones

Zone Selected

4) Press cancel

Zone silent, no broadcast
No alarm present on Fire Panel

After the Emergency return key to the Non Emergency position and remove the key.

To Broadcast a Non Emergency (Paging) Microphone Message

1) Zone Available — Zone silent, no broadcast

2) Press zone select of the desired zone or zones — Zone Selected
If no zones are selected an 'All Call' will be performed.

3) Press Speak key — Broadcast Paging Microphone

Wait for the Speak Now indicator to illuminate and speak into the microphone at approximately 150mm.

4) Release Speak key at end of announcement — Zone silent, no broadcast

Zone Fault Indication
Amplifier or loudspeaker circuit fault.
If a zone indicates a fault then an internal buzzer will sound until the 'Fault Accept' button is pressed.
The fault indication will remain until the fault is rectified.

Note: ***Even when a fault has been rectified the 'F' indication will remain on the zone display to indicate that a fault has occurred. To remove the 'F' indication press 'ACCEPT/LAMP TEST' and 'SELECT' buttons.***

If another fault is identified by the system the buzzer will be re-activated and will sound until the 'Fault Accept' is pressed again.

To Select Background Music (Aux 1-4), or Cancel Selection

1) Zone Available — Zone silent, no broadcast

2) Press ‘Select Zone’ of the zone or zones req’d. — Zone Selected

3) *To select BGM Aux 1:*
Press ‘Select AUX MUSIC’ once
Goto step **(8)** — Aux 1 selected

4) *To select BGM Aux 2:*
Press ‘Select AUX MUSIC’ twice
Goto step **(8)** — Aux 2 selected

5) *To select BGM Aux 3:*
Press ‘Select AUX MUSIC’ three times
Goto step **(8)** — Aux 3 selected

6) *To select BGM Aux 4:*
Press ‘Select AUX MUSIC’ four times
Goto step **(8)** — Aux 4 selected

7) *To Deselct BGM:*
Press ‘Select AUX MUSIC’ five times
Goto step **(8)** — No BGM

8) Press ‘PTT’ to Broadcast your selection — Displays your selection.

Zone Latching

Two separate modes are available for the zone select function either non-latching which will automatically clear down previously selected zones, or latching where previously selected zones are retained.

The two modes are selected by pressing and holding down the '**ACCEPT/LAMP TEST'** button and then pressing **ZONE SELECT '1'** button to toggle between modes.

The two different modes are shown by the **Zone Select Status Display**. None Latching, is shown as a single bar in the centre of the display, latching is shown as a single bar in the top of the display.

Functionally when used with the 'Listen In' software the system operates as follows –

Non-Latching. (Default) On selection of a zone or zones, the audio traffic on these zones is monitored via the 'Listen In' loudspeaker. The user can then operate the **Speak** button and make a live speech broadcast, on releasing the **Speak** button the previously selected zones will automatically clear down.

Latching. On selection of a zone or zones, the audio traffic on those zones is monitored via the 'Listen In' loudspeaker. The user can then operate the **Speak** button and make a live speech broadcast, on releasing the **Speak** button the previously selected zones will be retained. In this manner selected zones can be continuously monitored.

Zone Displays

–	Zone silent, no broadcast
=	Zone selected
E	Emergency Microphone Broadcast
1	Message 1 (Evacuate) broadcast
2	Message 2 (Fire Alert 1) broadcast
3	Message 3 (Fire Alert.2) broadcast
4	Message 4 (Bomb Alert) broadcast
5	Message 5 (All Clear) broadcast
6	Message 6 (Test Messages)
7	Message 7 (End of Test)
P	Paging Microphone Broadcast

Continued overleaf…

Zone Displays continued

Background Music – Aux 1

Background Music – Aux 2

Background Music – Aux 3

Background Music – Aux 4

Cancel Background Music

Amplifier or Loudspeaker circuit fault

Note: ***Even when a fault has been rectified the 'F' indication will remain on the zone display to indicate that a fault has occurred. To remove the 'F' indication press 'ACCEPT/LAMP TEST' and 'SELECT' buttons.***

Status Indicators (Not 7 segment LEDs)

There are various LEDs that indicate the status of zones, messages or faults.

Indicator	Status	Colour	Description
'System Fault'	Flashing with Buzzer	ALL FAULT INDICATORS ARE YELLOW	A Fault has been detected but not accepted by User. Press 'Accept / Lamp Test' to accept the fault. Another yellow indicator to show where the fault has been detected will also be illuminated.
'System Fault'	Illuminated		A Fault has been detected and accepted by the User.
Message Fault and 'System Fault'	Illuminated Flashing with buzzer		The relevant message has a fault that could prevent it from being broadcast. This will show a flashing 'System Fault' until accepted by the user.
'Mic' Fault and 'System Fault'	Illuminated Flashing with buzzer		The microphone has an audio fault that could prevent live announcements from being made. This will show a flashing 'System Fault' until accepted by the user.
'Proc Fault' and 'System Fault'	Illuminated Flashing with buzzer		A Processor fault has occurred that could prevent all functions of the console ***except* "Emergency All Call"**. This will show a flashing 'System Fault' until accepted by the user.
'Data LK Fault' and 'System Fault'	Illuminated Flashing with buzzer		There has been a Communication failure between the console and the central system that could prevent all functions of the console ***except* "Emergency All Call"**. This will show a flashing 'System Fault' until accepted by the user.
'Proc Restart' and 'System Fault'	Illuminated Flashing with buzzer		The Processor on the console has failed and restarted (e.g. after a power failure or similar). This will show a flashing 'System Fault' until accepted by the user. To cancel the indicator the recessed switch below 'Data LK Fault' should be pressed.
'Healthy'	Illuminated	ALL GREEN	There are no detected faults and the system is functioning OK.
'Emergency Enable'	Illuminated		Emergency Messages and Fire Microphone (priority 1) can be accessed.
'Speak Now'	Illuminated		The microphone is live & announcements can be made.
'Aux Music'	Illuminated		BGM has been selected or is being broadcast to at least one zone.
Message 'Active'	Illuminated		The relevant recorded message has been selected or is being broadcast to at least one zone.

BVRM DIL Switch Settings.

1	2	3	4		Emergency Mode		Paging Mode		5	6	7	8	BVR20 (Units)
0	0	0	0	FM1	Input 1	Priority 1	Input 1	Priority 12	0	0	0	0	1 only
1	0	0	0	FM2	Input 2	Priority 2	Input 2	Priority 13	1	0	0	0	1-2
0	1	0	0	FM3	Input 3	Priority 3	Input 3	Priority 14	0	1	0	0	1-3
1	1	0	0	FM4	Input 4	Priority 4	Input 4	Priority 15	1	1	0	0	1-4
0	0	1	0	PM1	Input 5	Priority 12	Input 9	Priority 16	0	0	1	0	1-5
1	0	1	0	PM2	Input 6	Priority 13	Input 10	Priority 17	1	0	1	0	1-6
0	1	1	0	PM3	Input 7	Priority 14	Input 11	Priority 18	0	1	1	0	1-7
1	1	1	0	PM4	Input 8	Priority 15	Input 12	Priority 19	1	1	1	0	1-8
0	0	0	1	PM5	Input 9	Priority 16	Input 13	Priority 20	0	0	0	1	1-9
1	0	0	1	PM6	Input 10	Priority 17	Input 14	Priority 21	1	0	0	1	1-10
0	1	0	1	PM7	Input 11	Priority 18	Input 15	Priority 22	0	1	0	1	1-11
1	1	0	1	PM8	Input 12	Priority 19	Input 16	Priority 23	1	1	0	1	1-12
0	0	1	1	AUX1	Input 13	Priority 20	Input 17	Priority 24	0	0	1	1	1-13
1	0	1	1	AUX2	Input 14	Priority 21	Input 18	Priority 25	1	0	1	1	1-14
0	1	1	1	AUX3	Input 15	Priority 22	Input 19	Priority 26	0	1	1	1	1-15
1	1	1	1	AUX4	Input 16	Priority 23	Input 20	Priority 27	1	1	1	1	1-16

When using RS485 port it is necessary to allocate a parallel input to the fire microphone or microphones to enable access faults. The parallel input must exist and unterminated. Several fire microphones may be allocated to the same input.